# Subminiature Switch SW44034

**Features**

- < 3/4” behind panel depth
- SPST, NO, momentary w/click
- 1/2” diameter mounting hole
- non-illuminated

Electro-Mech Series SW44034 is a subminiature momentary snap feel non-illuminated pushbutton switch. Compact and rugged for dense packaging situations. Water-resistant construction includes o-ring seal around the plunger and epoxy bead seal around base and terminals.

## Specifications:

| | |
|---|---|
| Ratings: | 30vdc or 125vac, 1a resistive, 0.5a inductive |
| Contact Resistance: | 0.025 ohm initially<br>0.100 ohm max after life |
| Dielectric Strength: | 1000 VRMS |
| Insulation Resistance: | 1000 megaohm at 500vdc |
| Life (at rated load): | 100,000 cycles minimum at rated load |
| Weight: | 3 grams (approx.) |
| Operating Pressure: | 32 oz. ± 8 oz. |
| Plunger Travel: | 0.080” (nom.) |
| Hardware Supplied: | hex nut (1/2”-32) and lockwasher |
| Terminals: | solder lug terminals |
| Pushbutton Lenses: | accomodates special EMC lens in sizes:<br>Round: 1/2”, 5/8”, and 3/4” diameter<br>Square: 1/2”, 5/8”, and 3/4”<br>Specify part number L4xxxC<br>xxx=EMC lens part number, C=color |
| Lamps: | none (non-illuminated) |
| Ordering info: | order as drawing SW44034,L4xxxC |

## Specifications (not to scale) (Drawing SW44034):

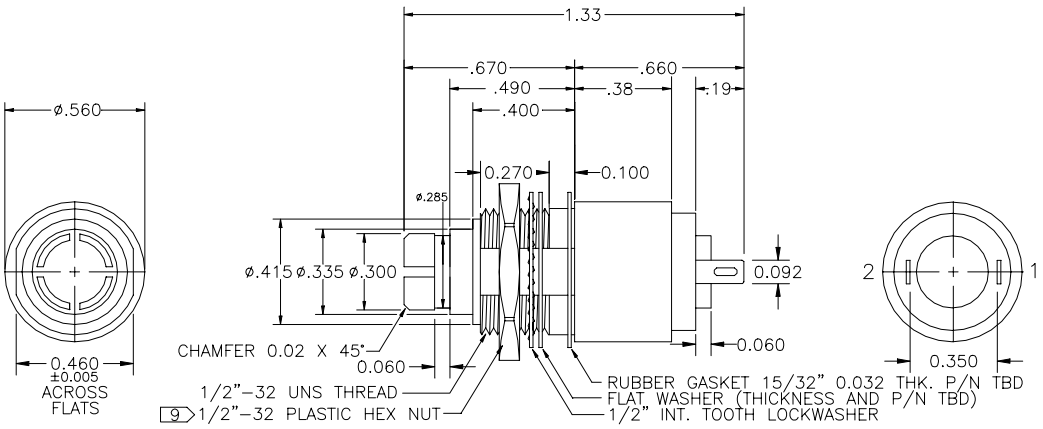


**Electro-Mech Components, Inc. ◆ 888/442-7180 ◆ 626/442-7180 ◆ Fax 626/350-8070**
1826 Floradale Avenue ◆ South El Monte, CA 91733-3689 USA ◆ Email Info@electromechcomp.com
web: www.electromechcomp.com

ELECTRO-MECH
COMPONENTS